ASSEMBLY INSTRUCTIONS

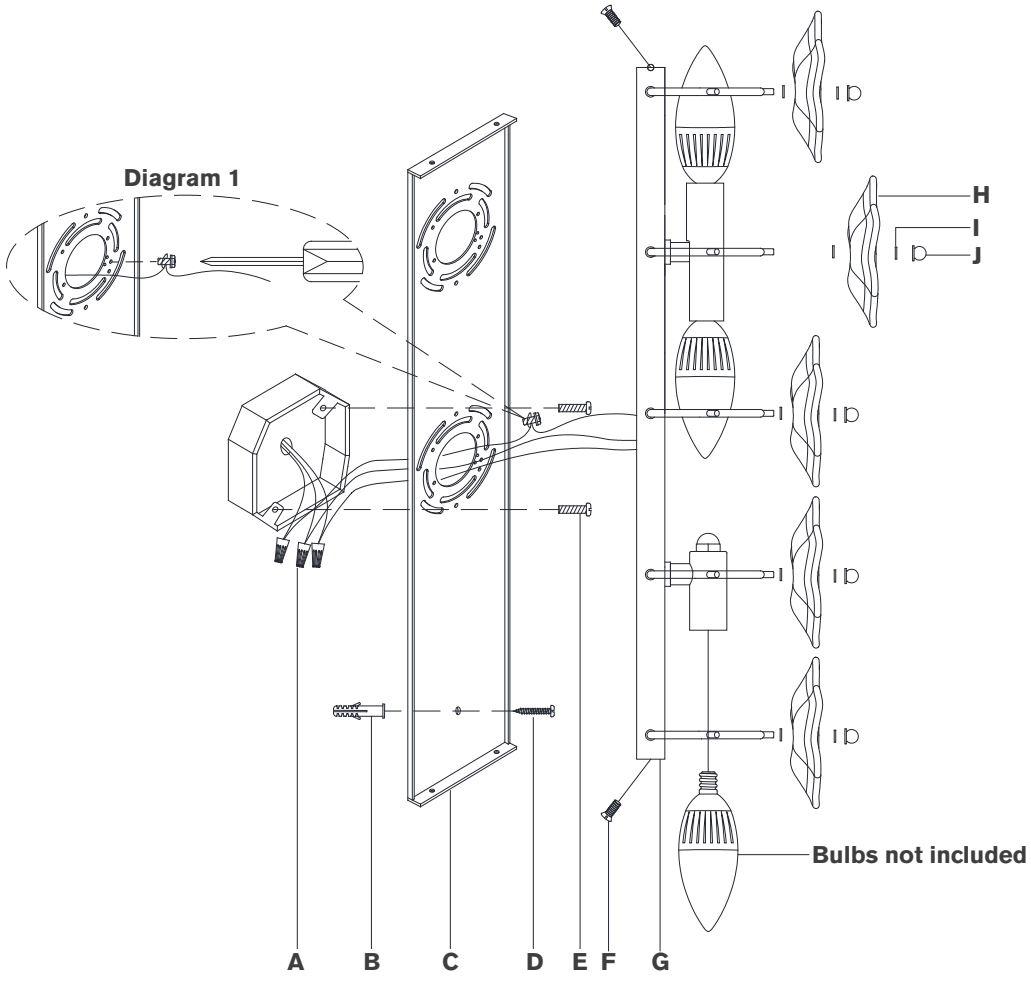

Leighton 20" Sconce

Item # KS 2066

NOTICE:

This light fixture should be installed in accordance with all applicable, local installation codes, and by a person familiar with the construction and operation of it, as well as the hazards involved. Inspect item and contents carefully. If any damage or defect is found, do not install. Retain all packaging material until installation is complete and approved.

TOOLS REQUIRED (NOT INCLUDED):

Phillips Screwdriver Slotted Screwdriver Drill
Pencil

1. Carefully remove all parts from the box. Place on a clean, soft surface.
2. Remove mounting plate **(C)** from fixture by removing screws **(F)**.
3. Using the mounting plate **(C)** as a guide, line up with the junction box and mark anchor positions.
4. Using a drill bit slightly smaller than the anchor, drill holes in the marked positions. Install anchors **(B)** into the holes.
5. Install mounting plate **(C)** to the junction box and secure with mounting screws **(E)**, then secure wood screws **(D)** to anchors **(B)**.
6. Wrap fixture ground wire (bare copper) around the green grounding screw (see diagram 1). Tighten. Continue fixture ground wire and connect to supply ground wire (usually green or bare copper) using wire nut **(A)**.
   NOTE: It is imperative that the fixture is grounded.
7. Connect fixture neutral wire (white) to the supply neutral wire (usually white) using wire nut **(A)**.
8. Connect fixture hot wire (black) to the supply hot wire (usually black) using wire nut **(A)**.
   CAUTION: Do not reverse the hot and neutral connections.
9. Make sure all wire connections are tight, then carefully tuck into the junction box.

ASSEMBLY INSTRUCTIONS

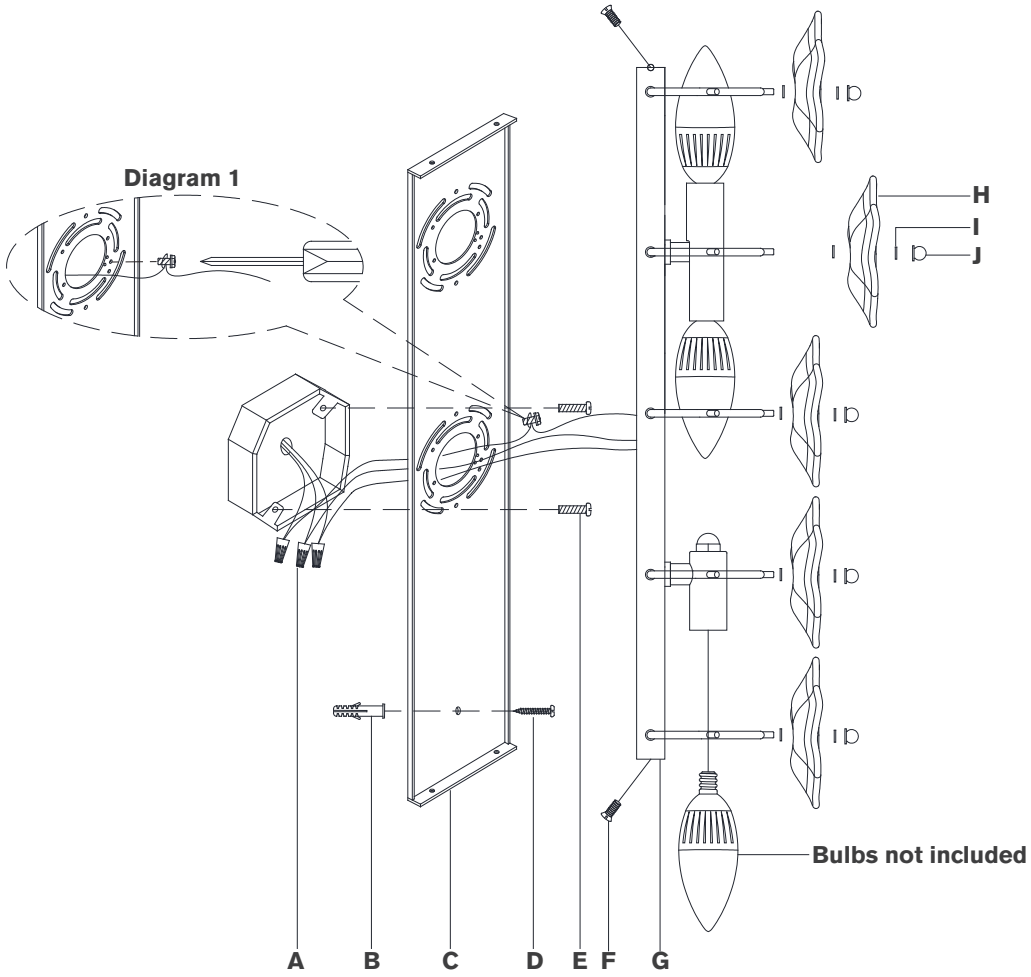

Leighton 20" Sconce

Item # KS 2066

NOTICE:

This light fixture should be installed in accordance with all applicable, local installation codes, and by a person familiar with the construction and operation of it, as well as the hazards involved. Inspect item and contents carefully. If any damage or defect is found, do not install. Retain all packaging material until installation is complete and approved.

10. Install fixture to mounting plate **(C)** by securing with screws **(D)**.
11. Install light bulbs into the sockets.
12. Attach rubber washers **(I)** to either side of the glass disk **(H)** and secure to fixture body **(G)** using finial **(J)**.

Care Instructions: Clean only with a soft dry cloth or feather duster. Do not use abrasive or chemical agents.